Modeling of STATCOM under different loading condition

Mr.S.R.Chavan
Student (M.E. Electrical Power system)
Matoshri College of Engineering, Nasik
Sunilchavan.10@rediffmail.com

Prof.S.S.Hadpe
Electrical Engineering Department
Matoshri College of Engineering, Nasik
hadpess@yahoo.com

***Abstract*— In this paper we will study the modeling of STATCOM under different loading condition i.e. linear and non linear load. Reactive power compensation plays very important role in transmission system as well as power quality problems related with non standard voltage, current, frequency. In order to maintain stability in the system reactive power is injected into transmission system to mitigate the problems such as voltage sags, swells and harmonics occurred due to different causes with and without STATCOM under linear and non linear load condition.**

Keywords*— *Phase locked loop ,Reactive power, R-L load,R-C load, STATCOM, voltage source converter

I. INTRODUCTION

In power system active and reactive power is regulated by changing the voltage and phase angle difference between sending end and receiving end respectively. The electronic devices also very sensitive to power quality problems such as voltage sags, swell, harmonics and voltage dips. Due to such problems severe black out occurs in power grids. So it's to necessary to improve the reliability and stability in the power system. The fast response fact devices make efficient solution for improve power quality in power system. It can be of shunt connected, series. dyanamic and steady state condition.The fast response of STATCOM improve the power quality in power system.it inject current into the system to correct the power quality problems such as voltage sag, swell and harmonics.The voltage source converter is the main component of the statcom which is based on power electronics technologies.The amount of current injected in the system can be controlled by changing the firing angle of the switch or by controlling the value of dc voltage of VSC. The control of voltage source converter is done with sinosidal pulse width modulation technique connected or combined series-shunt connected. It provide voltage support at critical buses.Power electronics devices are used to control the voltage,active and reactive power,transient and steady state that improves the operation of the power system.This devices provide quiet fast regulation and this enables control under dynamic and steady state condition. The fast response of STATCOM improves the power quality in power system. It injects current into the system to correct the power quality problems such as voltage sag, swell and harmonics. The voltage source converter is the main component of the STATCOM which is based on power electronics technologies. The amount of current injected in the system can be controlled by changing the firing angle of the switch or by controlling the value of dc voltage of VSC. The control of voltage source converter is done with sinusoidal pulse width modulation technique.

II.STATCOM-A REVIEW

STATCOM provide reliability and stability in the system. It controls the flow of reactive power flow. It's employ shunt of voltage boost technology using solid state switches for compensating power quality problems.

Basic Operation:

The voltage source converter is power electronics device which convert input dc voltage into three phase output voltage at the fundamental frequency. It can generate sinusoidal voltage with required magnitude, phase angle and frequency. A STATCOM is shunt voltage controller which is shown in figure 1.

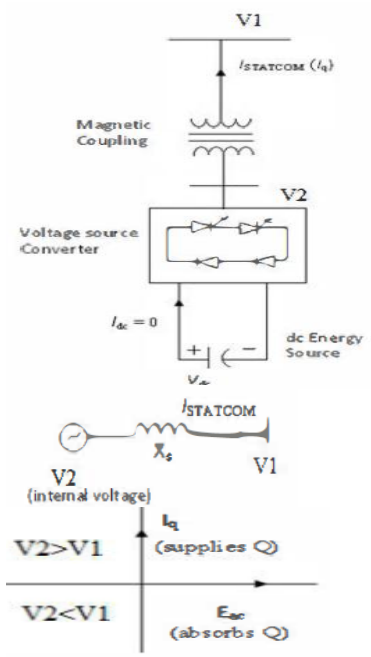

Figure 1 Basic structure of STATCOM

The STATCOM regulate the voltage at it terminal by controlling the amount of reactive power injected or absorbed from the power system. The VSC uses power electronics devices like GTO's or IGBT'S to synthesize the voltage from dc voltage source or battery. The operating principle of STATCOM is shown in figure 2. From the figure we can see that if V2>V1 then reactive current Iq flows from converter to ac system through coupling transformer. On the other side if V1>V2 then current Iq flows from ac system to converter.If V2=V1 then there is no flow of reactive power.The amount of reactive power exhange is given by:

$$Q = \frac{V_1(V_1 - V_2)}{X_S}$$

Where V1:Magnitude of voltage bus voltage
V2 : Magnitude of STATCOM output voltage
Xs : Equivalent impedance between STATCOM and bus.Capacitor or battery is used as dc voltage source.

III. POWER QUALITY PROBLEMS

The various types of disturbances occur in electrical system. Sometime momentary disturbance can cause scrambled data and failure of the equipment. This power quality problem may cause disturbances such as voltage sags, swells, flickers, harmonics distortion and interruption.

Causes of voltage sags and swells**:**

I. Rural area far away from power source.
II. Unbalanced load.
III. Sudden switching of heavy loads.
IV. Unreliable grid systems.

IV. SINUSOIDAL PWM BASED CONTROL

The main purpose of this method to maintain constant voltage under the system disturbances. Sinusoidal pulse width modulation techniques (SPWM) are adapted to investigate the performance of voltage source inverter. The amount of reactive power injected to the system can be controlled by changing the firing angle of the switch used in the VSC or by changing the value of DC voltage to the VSC. In this modulation technique are multiple numbers of output pulse per half cycle and pulses are of different width. The width of each pulse is varying in proportion to the amplitude of a sine wave evaluated at the centre of the same pulse. The gating signals are generated by comparing a sinusoidal reference with a high frequency triangular signal.The main parameter of SPWM is modulation index. Let the modulating signal is a sinusoidal of amplitude Am, and the amplitude of the triangular carrier is Ac.
The ratio M = Am/Ac is known as Modulation Index.

V. CONTROL OF INTERFACING INVERTER

The control diagram of grid- interfacing inverter 3-

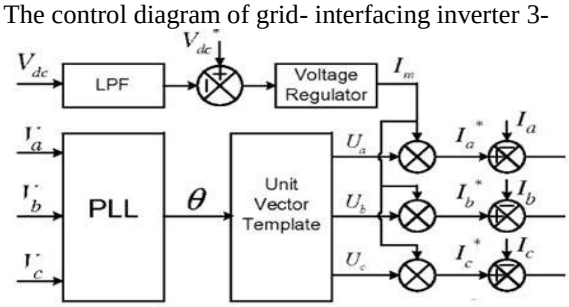

Figure2 Block diagram representation of grid-interfacing inverter control

phase system is shown in figure2.

While performing the power management operation, the inverter is actively regulated in such a way that it always draws/ supplies fundamental active power from/ to the grid. For non-linear or unbalanced load or the combination of both, this control approach also compensates the harmonics, unbalance,. The duty ratio of inverter switches are varied in a power cycle such that the combination of load and inverter injected power appears as balanced resistive load to the grid. The regulation of dc-link voltage carries the information regarding the exchange of real power in between source and grid. Thus the output of dc-link voltage regulator results in an active current (Im) . The multiplication

of active current component (Im) with unity grid voltage vector templates (Ua, Ub and Uc) generates the reference grid currents (Ia*,Ib* and Ic*). The grid synchronizing angle (θ) obtained from phase locked loop (PLL) is used to generate unity vector template as

Ua= sin (θ) (1)

Ub= sin (θ -120) (2)

Uc= sin (θ +120) (3)

The actual dc-link voltage Vdc is sensed and passed through a first-order low pass filter (LPF) to eliminate the presence of switching ripples on the dc-link voltage and in the generated reference current signals. The difference of this dc-link voltage and reference dc-link voltage Vdc* given to a voltage regulator to maintain a constant dc-link voltage under varying generation and load conditions. The reference grid currents(Ia*,Ib*, Ic*and In*) are compared with actual grid currents (Ia, Ib, Ic and In) to compute the current difference . These current difference are given to hysteresis current regulator. The hysteresis controller then generates the switching pulses (P1 *to* P8) for the gate drives of grid-interfacing inverter.

VI. ADVANTAGES OF SPWM

1) Low power consumption.
2) High energy efficient up to 90%.
3) High power handling capability.
4) No temperature variation-and ageing-caused drifting or degradation in linearity.
5) Easy to implement and control.
6) Compatible with today's digital microprocessors

V. CONCLUSION

This paper represent the power quality problems such as voltage sag ,swell, harmonics due to various types of linear and non linear loads so it's necessary to inject reactive power. Reactive Power Compensation plays a very important role in the transmission of Electric Power. STATCOM is necessary to enhance the steady state and transient voltage control, and to improve the sag elimination capability.

REFERENCES

[1] Ravila madhusudan and G. Rammohan Rao,`Modelling and Simulation of Distribution STATCOM (D-STATCOM) for Power Quality Problems-Voltage Sag and Swell Based on Sinusoidal Pulse Width Modulation (SPWM)' IEEE, International Conference On Advances In Engineering, Science And Management (ICAESM -2012) March 30, 31,2012

[2] B.S.Krishna Varma, G.Vineesha, `Simulated Control System Design of multilevel STATCOM for Reactive Power Compensation'IEEE-international Conference On Advances In Engineering, Science And Management (ICAESM -2012) March 30, 31, 2012

[3] J. Ganesh Prasad Reddy, K. Ramesh Reddy, Design and Simulation of Cascaded H-Bridge Multilevel Inverter Based DSTATCOM for Compensation of Reactive Power and Harmonics,.1 Infl Conf. on Recent Advances in Information Technology I RAIT-20121

[4] Mithilesh Kumar Kanauji and Dr.S.K.Srivastava, Power Quality Enhancement with D-Statcom under Different Fault Conditions. International Journal of Engineering Research and Applications (IJERA) ISSN: 2248-9622 Vol. 3, Issue 2, March -April 2013

[5] Gishin Jacob George, Rakesh R. Dr. M. Kowsalya, Modelling of STATCOM under Different Loading Conditions', IEEE Press, 2012

[6] N.G.Hingorani and L.Gyugyi, 'Understanding FACTS-Concepts and Technology of Flexible AC Transmission Systems, IEEE Press, New York, 2000

[7]. K.R.Padiyar, 'FACTS Controllers in Power Transmission and Distribution', New Age Publishers, India, 2007.

[8].A. F. Huweg, S. M. Bashi- and N. Mariun, A STATCOM Simulation Model to Improve Voltage Sag Due to Starting of High Power Induction Motor', National Power & Energy Conference (PECon), Kuala Lumpur, Malaysia, 2004.

[9] J.C.Das, 'Power System Analysis Short Circuit Load Flow and Harmonics', Marcel Dekker, New York, 2002.